Head Office: Najm Abadi Sq., Shams Tabrizi St., Mirdamad St., Teheran, Iran.
P.O Box: 1549846158
Tel: +98 21 22903200
Fax: +98 21 22279064

Factory: 6th km of Tehran-arak Road, arak - Iran.
P.O Box: 38135-877
Tel: +98 86 34131220
Fax: +98 86 34131280

WELDING & CUTTING EQUIPMENT
KARA
KARA GROUP

CATALOGUE

KARA Economy CNC Cutting Machine

KARA

KECCM

KARA Economy CNC Cutting Machine

1. Suitable for making exact cuttings in various shapes and sizes using Oxy-Fuel and plasma cutting techniques.

2. Possibility of Oxy-Fuel or plasma torch Installation on the leading head.

3. Having a robust and durable machining structure.

4. Having an accurate and high-speed linear motion using servo motor and precision gearbox with a Very Low Backlash.

5. Equipped with two servo motors and low backlash gearboxes at the two sides of machine for a constant and vibration less motion. (Gantry bridge)

6. possibility of transferring longitudinal motion force of cutting gate using a rack pinion for a fast and precise travel speed.

7. Possibility of linear movement of cutting torch on the linear ball bearings using a bevel gear for fast and precise movements (Rack pinion and linear guide).

8. Using the microstep Computer torch control system made in Italy with a 2016 performance Version.

9. Equipped with an automatic height control system for torches to prevent crashing of torch with Plate (optional).

10. Equipped with solenoid valves for each torch to avoid oxygen and gas waste, to adjust cutting flame and easy operation.

11. Equipped with flashback arrestor for flame safety.

12. Having a dust swiper for slide rails.

13. Equipped with robust, integrated and adjustable slide rails for weak inclined workshop bed.

14. Having a set of robust steel and tables and steel band stand which can be replaced bend easily.

KECCM

Main Technical Specifications

1	Effective cutting width (mm)	2500
2	Effective cutting length (mm)	6000
3	Type of cutting torches	Single: Plasma or Oxy-fuel
4	Plasma cutting's power supply	KARA Plasma 200A or other brands
5	Plasma cutting thickness (mm)	0.5 – 25 for Carbon steel (Recommended) / up to 45 (Max cutting range) 0.5 – 20 for Stainless Steel (Recommended) / up to 35 (Max cutting range) 0.5 – 15 for Aluminum (Recommended) / up to 25 (Max cutting range)
6	Plasma hole piercing thickness (mm)	Max 15 mm
7	Oxy-fuel cutting thickness (mm)	Single Torch: 5 - 300
8	Maximum jogging speed (mm/min)	2000
9	Machine's control system (optional)	MicroStep (China)
10	Cutting Flame's safety system	Flashback Arrestor
11	Oxy-fuel torch’s height adjustment system	Manual
12	Plasma torch adjustment system (Optional)	Manual
13	Protection classification	IP 20
14	Machine’s Electric Power Consumption	220V-50 Hz-1PH-16A
15	Cable protection and guidance system	Energy chain guide
16	System for turning on oxy-fuel cutting torch	Automatic spark plug transformer
17	Machine's linear movement system	Wheel + Rack & Pinion
18	Machine's Driving components	Servo motors + planetary gearbox
19	Possibility to increase the length and width of machine (optional)	Length: Up to 12 m
20	Overall Machine's Dimension (mm)	7300 x 3500
21	Overall Machine's Weight (kg)	2140
22	Machine's Worktable (Options)	Standard

KECCM

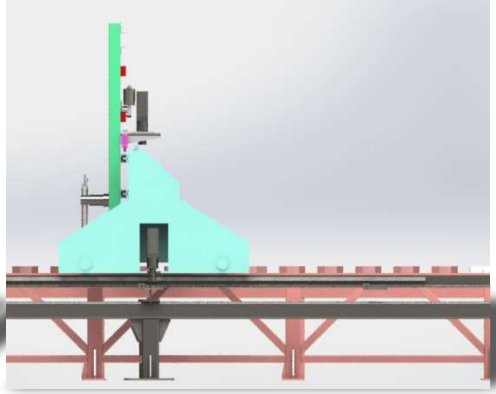

FIGURE NO.2

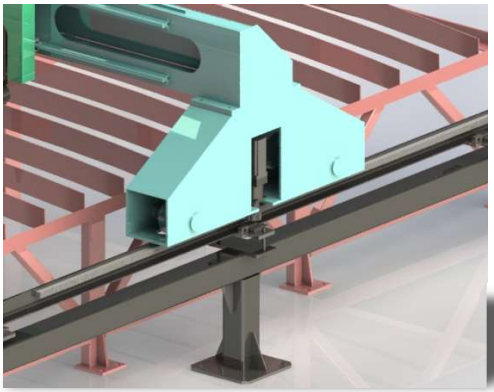

FIGURE NO.1

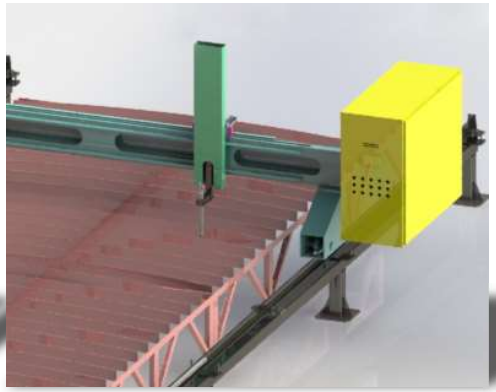

FIGURE NO.4

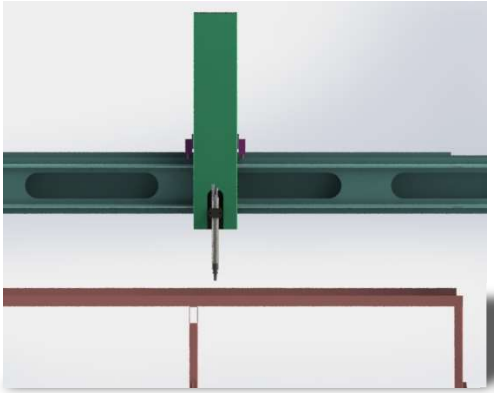

FIGURE NO.3

KECCM

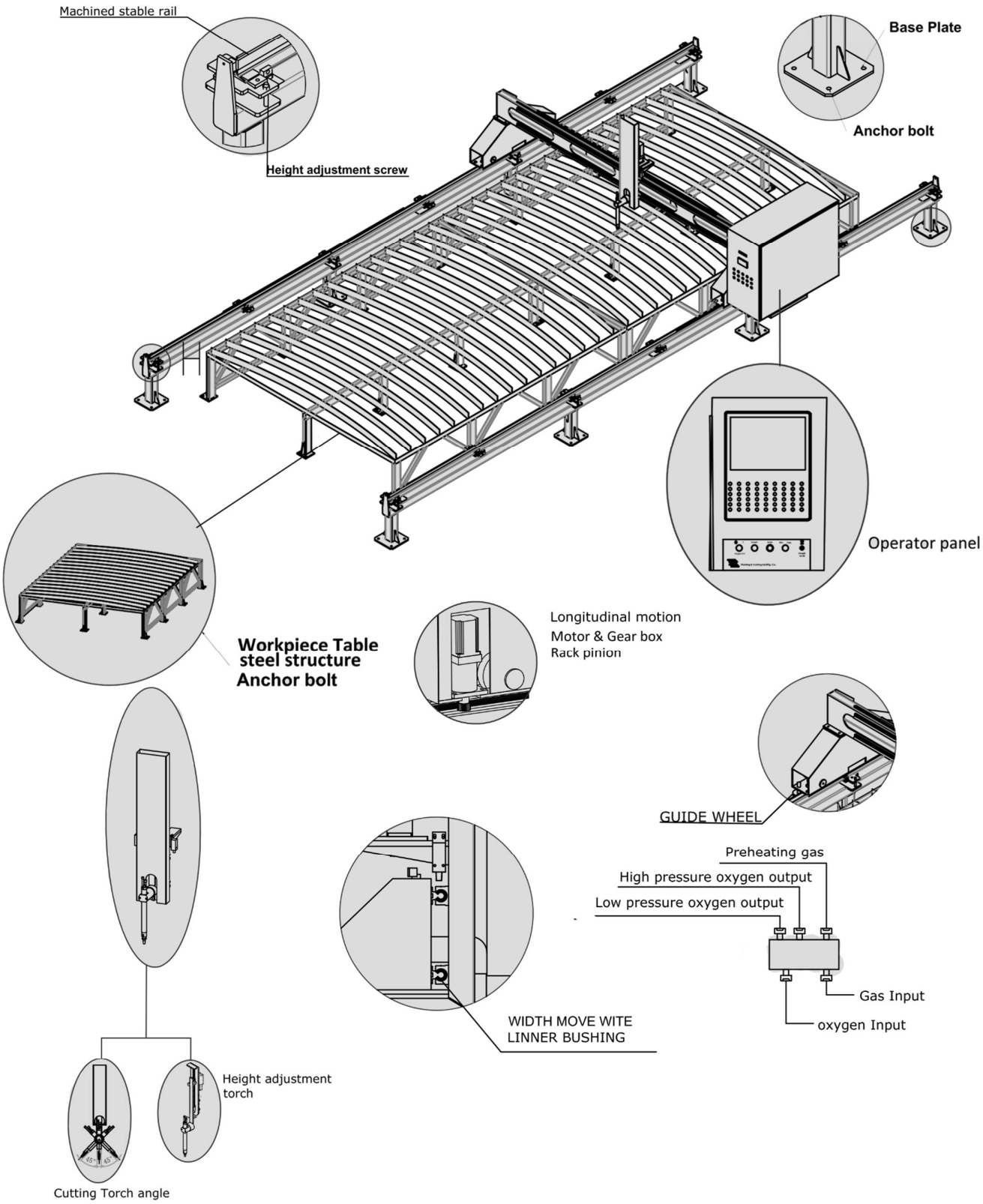
Machined stable rail
Height adjustment screw
Base Plate
Anchor bolt
Operator panel
Workpiece Table
steel structure
Anchor bolt
Longitudinal motion
Motor & Gear box
Rack pinion
GUIDE WHEEL
Preheating gas
High pressure oxygen output
Low pressure oxygen output
Gas Input
oxygen Input
WIDTH MOVE WITE
LINNER BUSHING
Height adjustment
torch
Cutting Torch angle

KECCM

Machine Control System

MicroStep (China)

Technical Specifications:

1.Large LCD: 15” CC-Z4 Cutting Numerical Controller Four Torches separately control. It has many cutting types and it works well in worse environment.

2. Stronger Industrial Embedded Core.

3. Support various compound cutting, plasma, flame, laser, line-draw, drill, can steady work in the electromagnetism environment.

4. Support different cutting, such as cutting, such and so on. It can stably work under complicated electromagnetic environment.

5. Transferring file method: USB

6. Adjustable cutting torch: Kerf.

7. Predefined figure library.

8. Backward cutting facility.

9. G-code Generator: pronest software programs (in office).

10. Open loop servo control.

11. Oxy- fuel & plasma height control: External

12. User friendly.

13. Simple operator training.

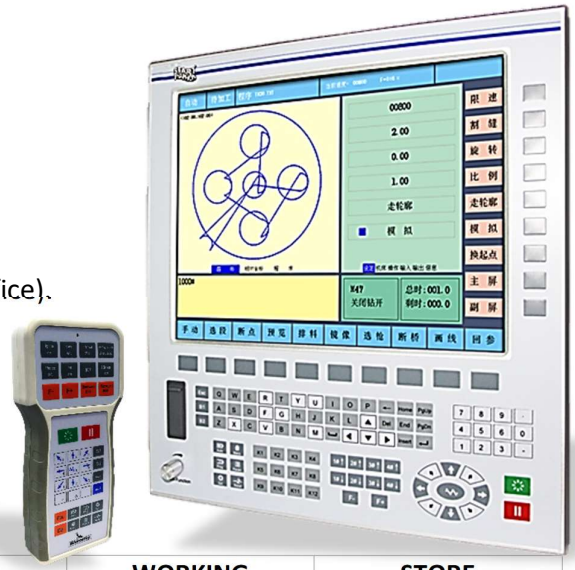

PROCESSOR	DISPLAY	DIMENSION	WORKING TEMPERATURE	STORE TEMPERATURE
Industrial ARM processing chip	15” colors	390 x 418 x 64 mm	0℃ ～ 55℃	-40℃ ～ 60℃
NO. OF LINKAGE AXIS	**I/O CONTROL**	**CONTROL PRECISION**	**STORE SPACE**	**HIGHEST SPEED**
2-6 Axis	Input x 32 output x24	0.001 mm	8G and it supports U disk	36 m/min

Accessories products:

Remote Control: RFM1 RFS1

Arc voltage torch height controller: AHG-1 AHa-L1

Torch lifting device: AHb-M2 AHb-L2

KECCM

KARA PLASMA 200A Technical Specification

1	Type of voltage control	Thyristor Control
2	Current control steps	Stepless
3	Current / Voltage Range	25A/110v ~ 200A/200V
4	Permissible Load @100% D.C.	200A
5	Open Circuit Voltage	380V
6	Input Fuse Slow	100A
7	Input Current@ 100% D.C.	100A
8	Max Power	66KW
9	No Load power	500 W
10	Mains input power	3x380 V/50Hz
11	Over Load Protection	Thermostat
12	Cooling Type	A.F.
13	Protection Class	IP20
14	Insulation Class	H
15	Dimension L/W/H	760/590/1435 mm
16	Weight	460 Kg
17	Air Input Pressure	7 Bars
19	Air Consumption	230 L/min
20	Torch Cable Length	6 m (additional are available by request)

KECCM

KARA Quality Certificates

Contact US

www.karasazeh.com

araksales@karasazeh.com

kara.groups

karasazehgroup