Head Office: Najm Abadi Sq., Shams Tabrizi St., Mirdamad St., Teheran, Iran.
P.O Box: 1549846158
Tel: +98 21 22903200
Fax: +98 21 22279064

Factory: 6th km of Tehran-arak Road, arak - Iran.
P.O Box: 38135-877
Tel: +98 86 34131220
Fax: +98 86 34131280

CATALOGUE

KARA CANTILEVER WELDING MACHINE

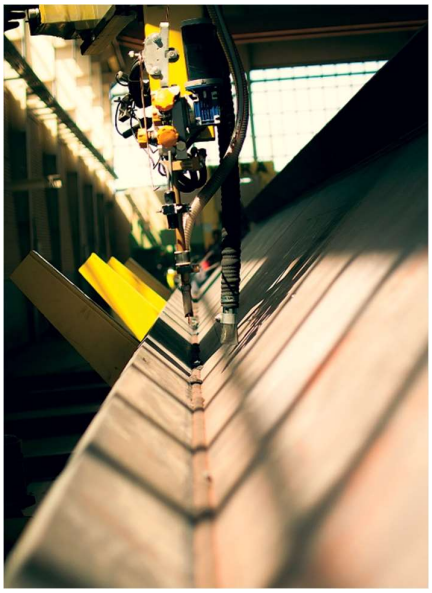

KCWM

KARA CANTILEVER WELDING MACHINE

The machine consists of cart, column, boom, welding arm & tool carriage, mechanical welding torch tracing device, and electrical control system. The cart, column and boom are the framework of the machine. Welding arm and tool carriage are installed on boom, welding gun mechanical tracking device is used to support welding head and adjust the location of welding tip. There are several groups of idler wheels on the tool carriage to closely attach with the guiding rails for upper & lower and left & right traveling. Two groups of driving devices will be used to drive the traveling of welding arms in upper, lower, left and right direction. The mechanical welding torch tracing device is installed at the lower part of welding arm and the wire feeding device of welding head is installed at the upper part, which can assure the welding tip be aimed at the welding seam, but kept with certain clearance. Additionally, the manual left-right adjusting device for welding torch is equipped.

The electrical control system consists of electrical control box and operation panel. Through this system, all operations of machine, adjustment of welding parameters of welding machine and switches of flux recovery machine will be controlled and executed.

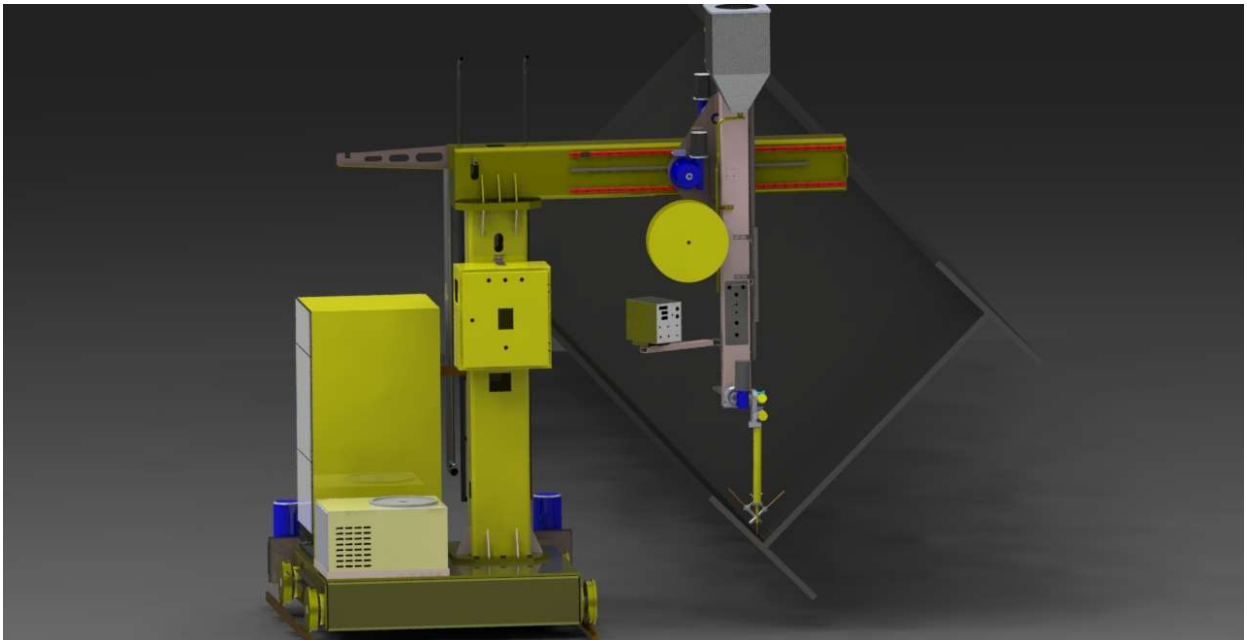

KCWM

Main Technical Specifications

1	Minimum and maximum working dimensions	Min: 200 mm – Max: 1500 mm
2	Minimum and maximum working length	Min: 250 mm – Max: 12000 mm
3	Machine's Linear movement speed	Vc:2410 Vr(max): 320 Vh(max): 390
4	Input Current	40 A
5	Input Voltage	380 V ~ 50 Hz
6	Machine's control system	Inverter - Delta
7	Panel's degree of protection	IP52
8	Machine’s Electric Power Consumption	Nominal Current @ Max. loud: 380v – 50Hz 3ph – 110 A
9	Welding's power supply	KARA TCR1250 A
10	Welding powder suction system	KARA Suction
11	Machine's linear movement system	Motor & Gearbox + rack pinion, 2 sides
12	Welding nozzles guidance system	Automatic Proximity sensor for each side
13	Welding powder tank capacity	50 Kg
14	Capacity of welding wire pulleys	35 Kg
15	Power of welding wires	Wire 2.4 mm ~ 5 mm
16	Overall Machine's Dimension (mm)	W: 2136 mm, H: 4200 mm, L: 1568 mm
17	Overall Machine's Weight (kg)	2050

KCWM

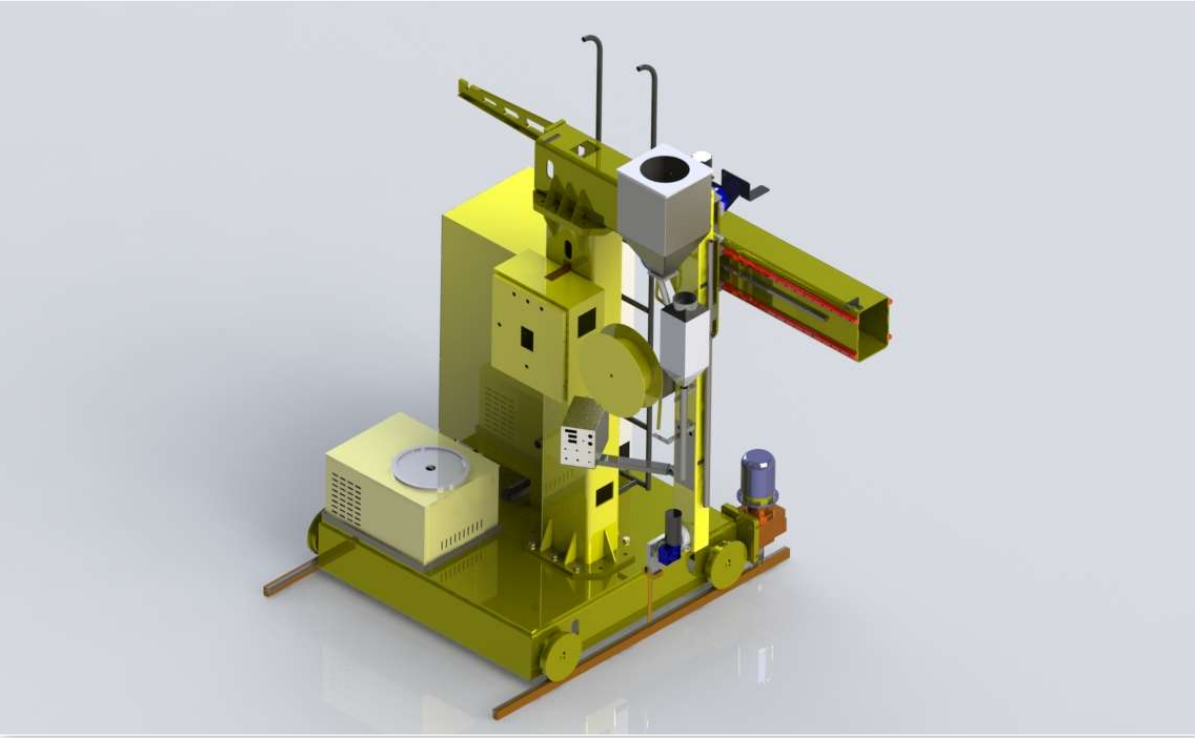

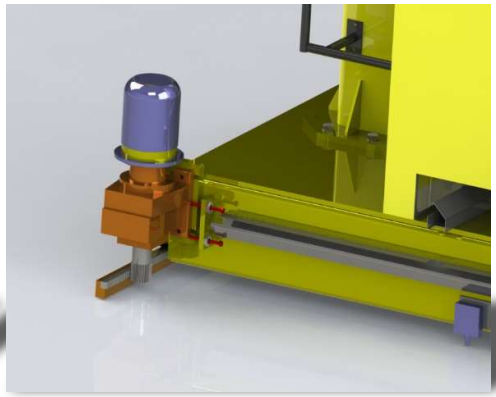

FIGURE NO.9

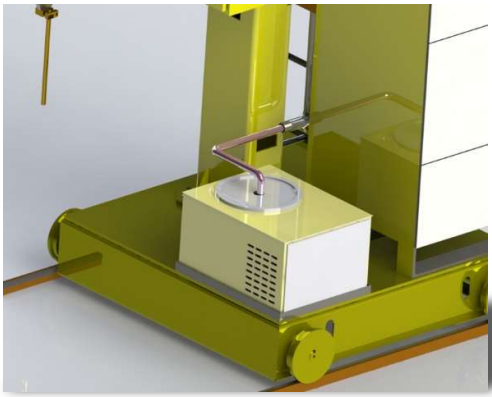

FIGURE NO.8

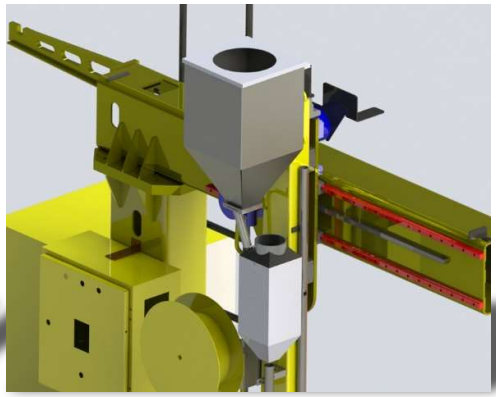

FIGURE NO.11

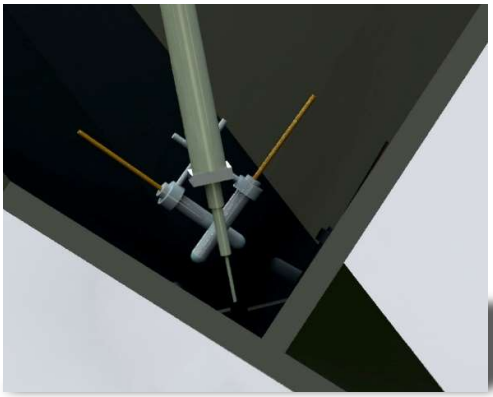

FIGURE NO.10

KCWM

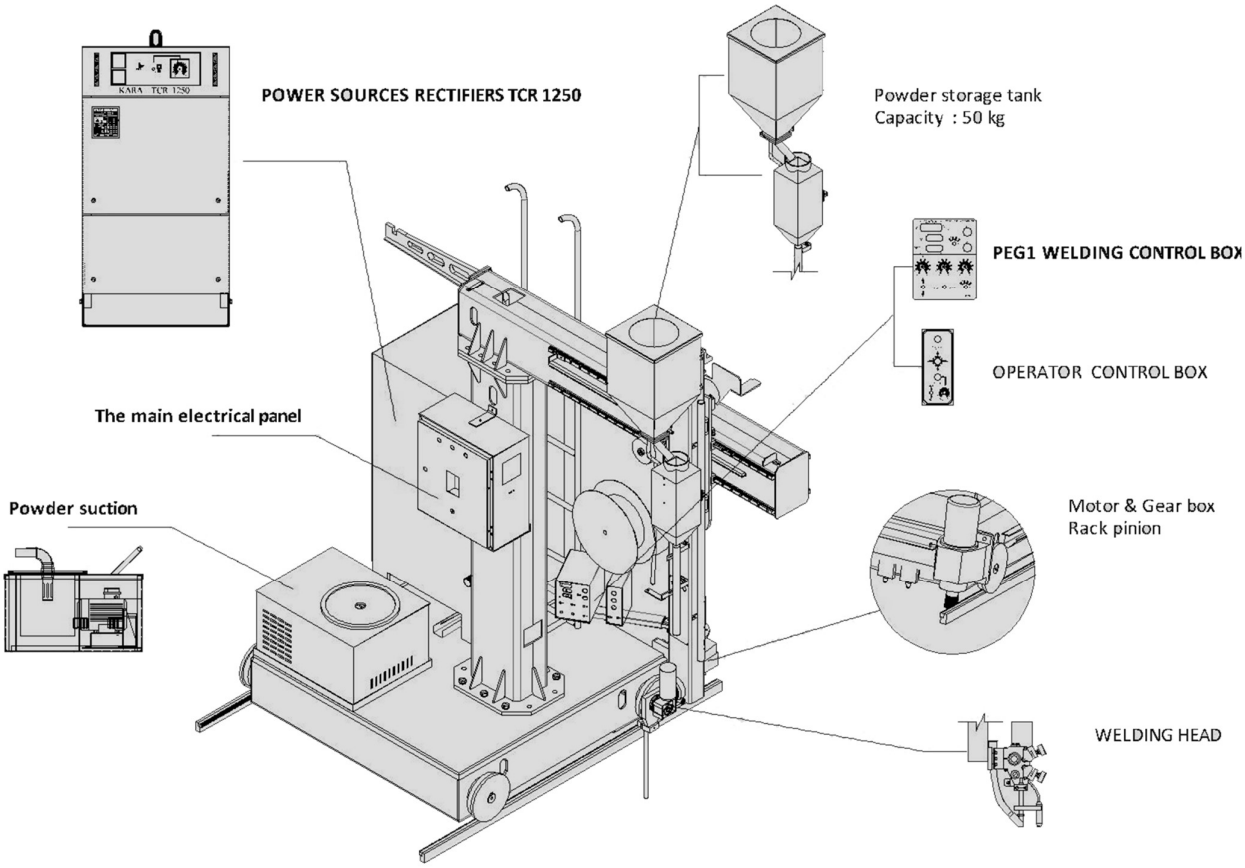

Machine Dimensions													
	A	B	C	D	E	F(max)	G	H					
mm	1960	2136	1400	1400	3010	4200	285	1568					
Stroke of Torch	X	Y	Vh (Max)		Vr (Max)		Vc						
mm	1045	1005	390 mm/min		320mm/min		2410 mm/min						
Max Loading Capacity (end of boom) : 250 Kg							Deflection : 3mm (end of boom)						

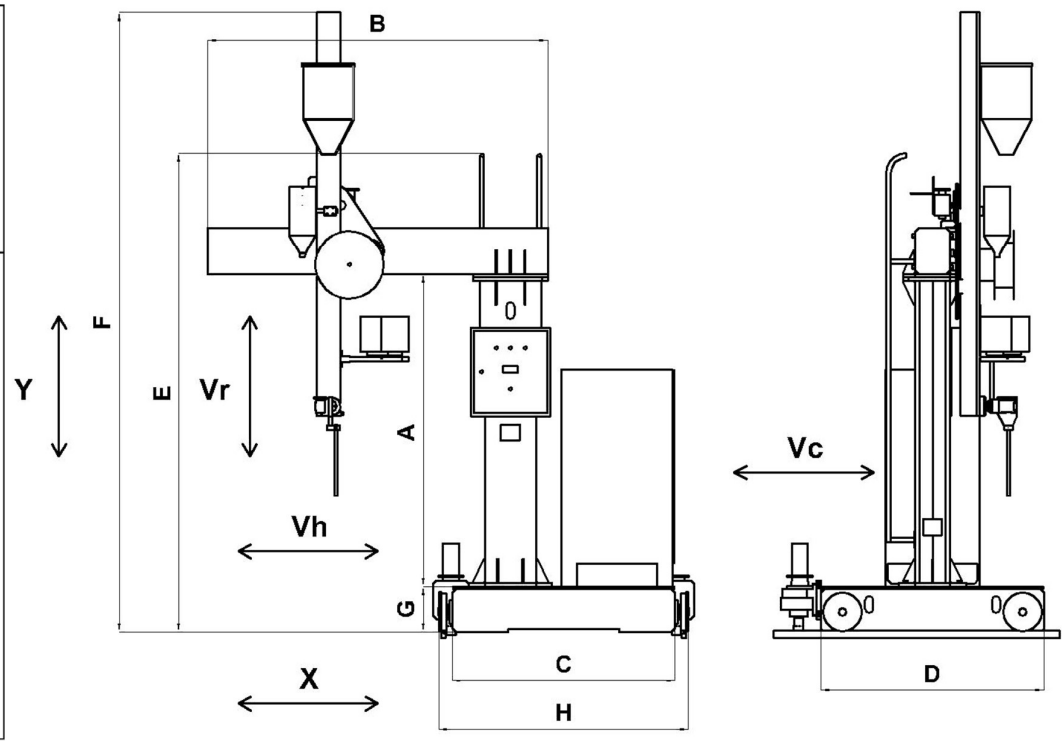

KCWM

KARA TCR 1250A Technical Specifications

1	Setting range	250A / 24V – 1250 / 44V
2	Max. load at 100% duty cycle	1250A / 44V
3	Max. output voltage variation for 5% in variation	2%
4	Max. output current at 100% D.C.	106A
5	Open circuit voltage	55V D.C
6	No load power	500W
7	Input power	3Ph/380V/50H
8	Full load Cos ø	0.92
9	Full load efficiency	0.86
10	Cooling Type	Air circuit with fan
11	Protection class	IP22
12	Insulation class	H (180°C)
13	Dimension L/W/H	760 / 590 / 1435 mm
14	Weight	490 Kg
15	Fuse (time lag)	125 A
16	Input cable area	4 x 25 mm
17	Output cable area	2 x 95 mm

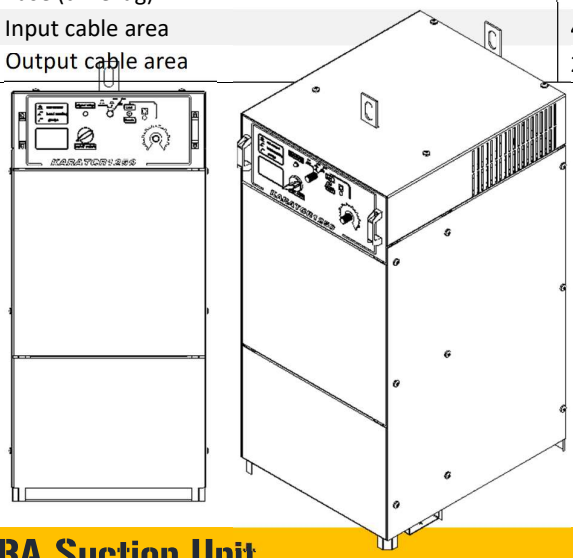

KARA Suction Unit

1	Power	1.5kw
2	Voltage	380 v 3 ph.
3	Current	2.8 A
4	Vacuum	210 mbar÷
5	Air flow	180 m3/h
6	Weight	82 kg

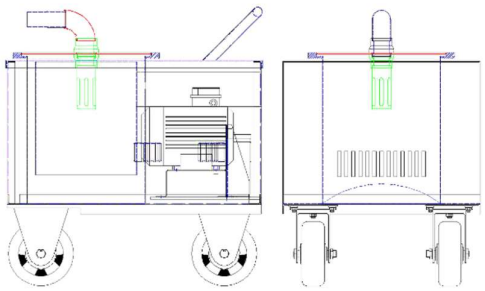

KCWM

KARA Quality Certificates

Contact US

www.karasazeh.com

araksales@karasazeh.com

kara.groups

karasazehgroup